ELECTRONIC MEASUREMENT LAB MINI-PROJECT

AMBIENT LIGHT-CONTROLLED LED INTENSITY AND LUX DISPLAY WITH BLUETOOTH COLOUR CONTROLLED LED

GROUP MEMBERS:

RISHI PATIL (22B-ET-048)
ROHIT VISHWAKARMA (22B-ET-050)
SOHM DIVKAR (22B-ET-065)

Department of Electronics & Telecommunication Engineering - Goa College of Engineering

SYNOPSIS:

This project demonstrates an intelligent lighting system that dynamically adjusts an LED's brightness based on the ambient light in the environment and allows for manual RGB colour control of another LED via Bluetooth.

An LDR (Light Dependent Resistor) is used in a voltage divider circuit to sense ambient light intensity, which is displayed on a 16x2 I2C LCD module. As ambient light decreases, the LED brightness increases, enhancing visibility in dark environments.

Additionally, users can control the colour of an RGB LED by sending RGB values through the Serial Bluetooth Terminal app, giving flexibility to set different moods or visual effects.

This project integrates ambient light detection, Bluetooth communication, and display technology, providing a hands-on approach to implementing IoT-based light control.

COMPONENTS USED:

1. ESP32 WROOM 32C: MICROCONTROLLER TO HANDLE DATA PROCESSING, BLUETOOTH COMMUNICATION, AND LCD DISPLAY.

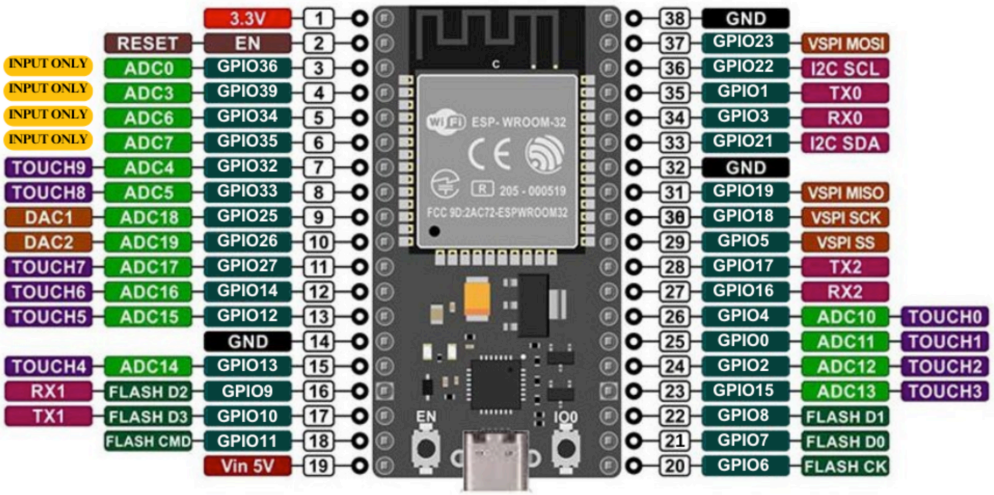

ESP32 - 38 PINS TYPE C USB

2. LDR (5 TO 10M OHMS): SENSES AMBIENT LIGHT LEVELS; RESISTANCE DECREASES WITH INCREASED LIGHT. HAS A RESISTIVE DYNAMIC RANGE OF ABOUT 5Ω TO 1MΩ

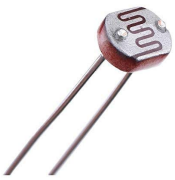

3. S8050 NPN TRANSISTOR: CONTROLS CURRENT THROUGH THE LED, ADJUSTING BRIGHTNESS BASED ON LDR INPUT.

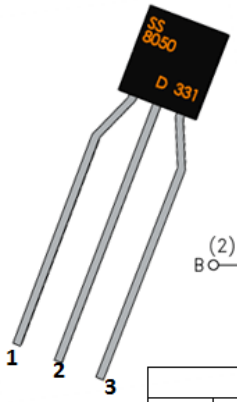

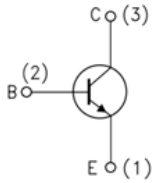

S8050	
1	Emitter
2	Base
3	Collector

4. COMMON CATHODE RGB LED: PROVIDES MULTI-COLOUR LIGHTING BY ADJUSTING BRIGHTNESS LEVELS FOR RED, GREEN, AND BLUE CHANNELS.

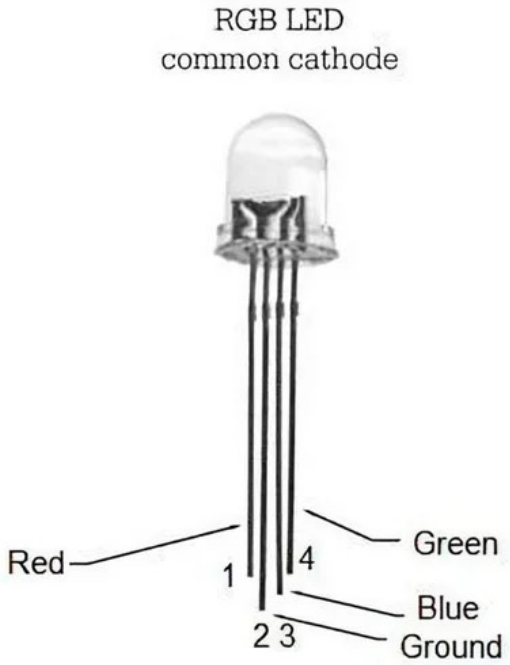

5. RESISTORS:

- **220Ω (5): USED FOR CURRENT LIMITING WHEREVER NECESSARY IN THE CIRCUIT**
- **10KΩ (1): PART OF THE LDR VOLTAGE DIVIDER.**

6. I2C 16X2 LCD MODULE: DISPLAYS THE CALCULATED LUX VALUE BASED ON THE AMBIENT LIGHT LEVEL.

FRONT:

BACK:

7. CONNECTING WIRES: CONNECTS ALL COMPONENTS.

8. USB-C POWER SUPPLY (5V): THIS POWERS THE ESP32 MICROCONTROLLER.

CIRCUIT CONNECTIONS AND SCHEMATIC:

CIRCUIT CONNECTIONS:

1. ESP32 TO I2C LCD:

LCD PIN	ESP32 Pin
Vcc	5V(Vin)
GND	GND
SCL	GPIO 21
SDA	GPIO 22

2. ESP32 TO RGB LED:

RGB LED Pin	ESP32 Pin
Red	GPIO 26 (via 220Ω resistor)
Green	GPIO 25 (via 220Ω resistor)
Blue	GPIO 33 (via 220Ω resistor)
Cathode	GND

3. LDR VOLTAGE DIVIDER CIRCUIT:

- 10kΩ and LDR in series.
- Middle point connected to GPIO 34 (analog input) which will be used to calculate the LUX value.
- Collector of the transistor is connected to Vin(5V) via a 220Ω resistor. The middle point of the voltages divider is connected to the base of the transistor. The emitter is connected to the anode of the red LED via a 220Ω resistor, and the cathode of the red LED is connected to GND.
- Power the divider with 5V.

SCHEMATIC:

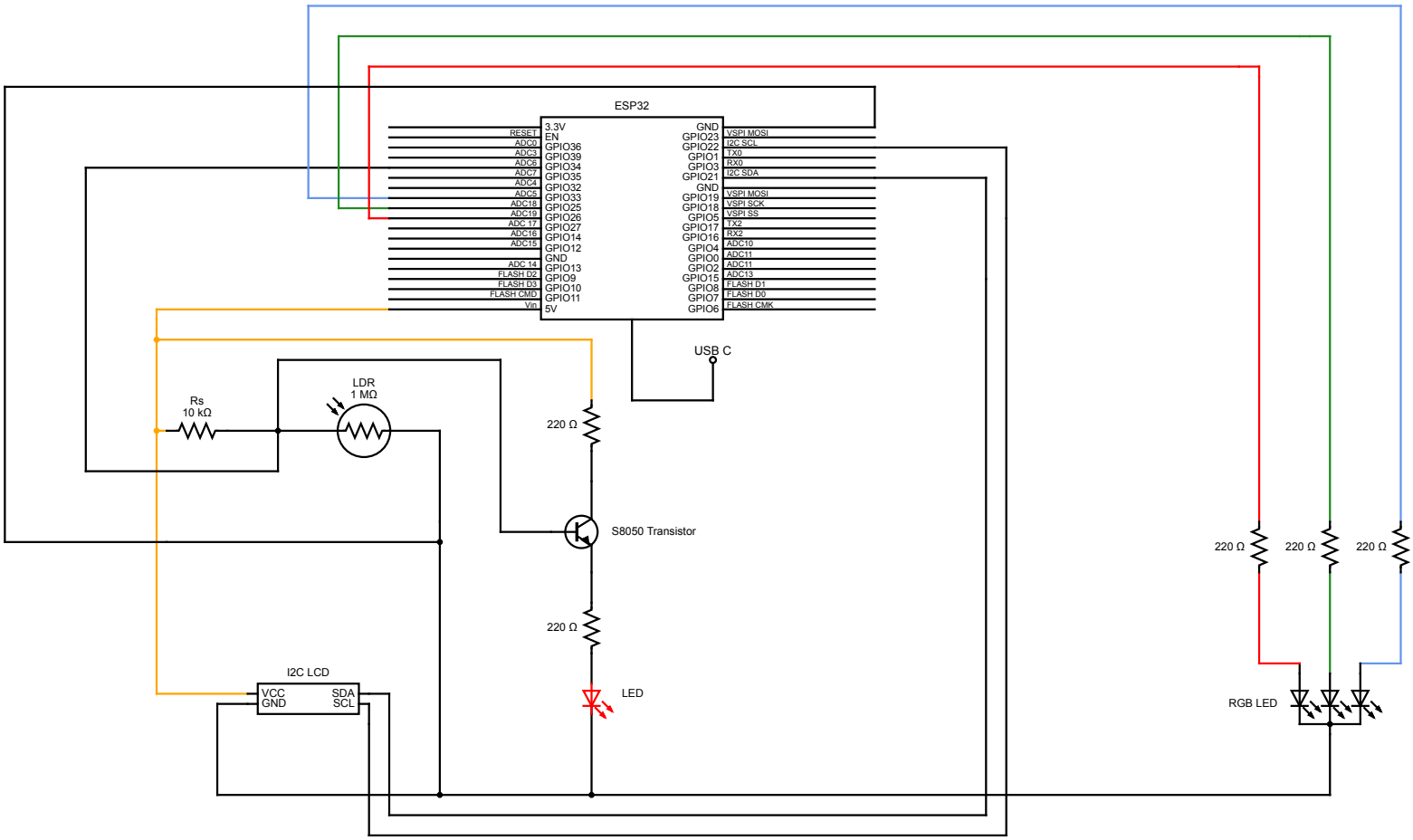

WORKING PRINCIPLE:

PART 1: LUX SENSING AND LED BRIGHTNESS CONTROL

1. VOLTAGE DIVIDER CIRCUIT:

- The LDR and the 10kΩ resistor are connected in a voltage divider configuration.
- When light intensity changes, the resistance of the LDR changes, thereby altering the voltage at the divider midpoint (connected to the transistor base).
- The transistor controls the LED brightness proportionally, based on the LDR's output voltage.

2. MATHEMATICAL EQUATION FOR LUX CALCULATION:

- The LDR resistance RLDR is inversely proportional to the light intensity(Lux).
- Using Ohm's law, the voltage VOUT can be derived:

$$Vout = Vsupply \times \frac{Rldr}{Rldr + Rfixed}$$

- Where V_{supply} = 5V(supply), R_{fixed} = 10KΩ

- This V_{out} is given to GPIO 34 of the ESP32. Since V_{out} varies logarithmically with R_{LDR}, we can calibrate the lux as follows:

$$Lux = A \times \ln(\frac{Vmax}{Vout}) + B$$

Where:

- V_{max} = 3.60V
- V_{out} is the voltage at the Voltage Divider junction
- Lux range is set to 4000Lux
- A and B are contents chose for appropriate calibration
- This maps out Lux logarithmically on a scale of 0-4000Lux

3. TRANSISTOR CONTROL:

- The transistor amplifies the current based on the voltage from the LDR circuit, making the LED brightness inversely proportional to ambient light: brighter in the dark and dimmer in bright light.

4. DISPLAYING LUX ON THE LCD:

- The ESP32 reads the analog voltage from the voltage divider, calculates the lux, and sends this data to the LCD using the I2C protocol for real-time display.

PART 2: RGB LED COLOUR CONTROL VIA

BLUETOOTH

1. BLUETOOTH SERIAL COMMUNICATION:

- The ESP32 connects to the Serial Bluetooth Terminal app, enabling communication through Bluetooth Classic.
- Users send RGB values as comma-separated hexadecimal values (e.g., “255,0,0” for red).

2. PARSING AND SETTING RGB VALUES:

- The received string is split into individual RGB values.
- Each value is mapped to the LED pins using analogWrite, adjusting the colour intensity.

3. LED COLOUR BLENDING:

- By varying the duty cycle on each colour channel, the RGB LED can display a wide range of colours.

METHODOLOGY:

PART 1: AMBIENT LIGHT SENSING CIRCUIT DESIGN

- **Transistor Selection and Voltage Divider Setup:**

- The LDR, in series with a 10kΩ resistor, forms a voltage divider circuit. The midpoint of this divider connects to the base of the S8050 NPN transistor, which amplifies the signal by controlling current flow.

  We selected the S8050 transistor based on its current-handling capability and gain characteristics, ensuring optimal response within the desired lux range.

- **Voltage Divider Analysis:**

  By analysing the response of the LDR, we determined that the voltage at the transistor's base ranges from approximately 3.6V in low light (darkness) to around 0.05V in bright conditions. This range provided an effective base for the calculation of lux levels.

  The ESP32 analog input pin (GPIO34) is used to read the voltage at the base of the transistor, capturing changes due to ambient light variations.

- **Lux Calculation Using a Logarithmic Relationship:**

Using the detected voltage range (0.05V to 3.6V), we implemented a logarithmic mapping to convert voltage to lux values from 0 (maximum darkness) to 4,000 lux (maximum brightness). The formula applied in the code is:

$$Lux = A \times \ln(\frac{Vmax}{Vout}) + B$$

Where V_{max} is 3.6V, V_{out} is voltage coming at the voltage divider section and the constants A and were chosen to scale lux approximately within the full brightness range.

- **Lux Display on I2C LCD module:**

  A. **LCD Setup and Initialisation**: The I2C LCD is configured with address `0x27` and wired to the ESP32's SDA and SCL pins.

  B. **Lux Display Logic**: The ESP32 processes the base voltage using the lux calculation formula, displaying the lux values on the LCD in real time.

  C. **Calibration and Debugging**: We confirmed lux levels by calibrating against known light levels to ensure accurate output across different environmental lighting conditions.

PART 2: BLUETOOTH-CONTROLLED RGB LED FUNCTIONALITY

- **RGB LED Circuit and Connections:**

  Each RGB channel (Red, Green, Blue) is connected to ESP32 PWM pins (red on pin 26, green on pin 25, blue on pin 33) via 220Ω resistors to limit current and protect the LED.

  The LED is common-cathode, and the PWM pins control the intensity of each colour channel by varying the duty cycle.

- **Bluetooth App Integration:**

  The ESP32 is set up to communicate via Bluetooth Serial with a mobile app, "Serial Bluetooth Terminal," allowing RGB values to be sent in the format `HHH,HHH,HHH`.

  The ESP32 receives these values, which specify the brightness for each colour component from 0 to 255. This allows for creating custom colours by adjusting

each component independently.Users tested multiple colour combinations, identifying and saving specific values to achieve desired colours easily.

ARDUINO IDE CODE:

```
//EM LAB MINI PROJECT
/*Code for Ambient light-controlled led intensity
 and lux display with bluetooth colour controlled led*/

#include <Wire.h>
#include <LiquidCrystal_I2C.h>
#include <BluetoothSerial.h>
#include <math.h>

// LCD setup (I2C address: 0x27)
LiquidCrystal_I2C lcd(0x27, 16, 2);

// Bluetooth Serial object
BluetoothSerial ESP_BT;

// Pin Definitions
const int ldrPin = 34;   // LDR input pin
const int redPin = 26;   // Red LED
const int greenPin = 25; // Green LED
const int bluePin = 33;  // Blue LED

// Voltage range for LDR circuit
const float Vmax = 3.60;  // Max voltage (brightness)
const float Vmin = 0.05;  // Min voltage (darkness)

// Constants for Lux Calculation
float A;  // To be computed based on range
float B;  // To be computed based on range

void setup() {
  Serial.begin(115200);

  // Initialise LCD
  lcd.init();
  lcd.backlight();

  // Initialise Bluetooth Serial
  ESP_BT.begin("ESP32_RGB_Controller");  // Bluetooth name
  Serial.println("Bluetooth Device Ready");
```

```
// Display startup message
  lcd.setCursor(0, 0);
  lcd.print("Lux Meter Ready");

  // Calculate constants A and B for Lux conversion with inversion
  A = 4000 / (log(Vmax / Vmin));
  B = 0;  // We offset to start from 0 lux at darkness
}

void loop() {
  // Display lux value on the LCD
  displayLux();

  // Check for Bluetooth data
  if (ESP_BT.available()) {
    String rgbData = ESP_BT.readStringUntil('\n');
    Serial.println("Received: " + rgbData);
    setRGB(rgbData);
  }

  delay(500);
}

void displayLux() {
  // Read voltage from the LDR
  float voltage = analogRead(ldrPin) * (5 / 4095.0);

  // Calculate lux using adjusted logarithmic mapping
  float lux = A * log(Vmax / voltage) + B;
  lux = constrain(lux, 0, 4000);

  // Display lux on LCD
  lcd.setCursor(0, 0);
  lcd.print("Lux: ");
  lcd.print(lux);
  lcd.print("     ");
}

void setRGB(String data) {
  int comma1 = data.indexOf(',');
  int comma2 = data.indexOf(',', comma1 + 1);

  int r = data.substring(0, comma1).toInt();
  int g = data.substring(comma1 + 1, comma2).toInt();
  int b = data.substring(comma2 + 1).toInt();

  analogWrite(redPin, r);
  analogWrite(greenPin, g);
  analogWrite(bluePin, b);

  Serial.printf("RGB: R=%d, G=%d, B=%d\n", r, g, b);
}
```

FINAL ASSEMBLY AND TESTING

1. COMPONENT PLACEMENT AND SOLDERING:

- Each component was carefully placed on a solderable breadboard, ensuring logical and compact placement for neat wiring and reliable connections.

- The LDR and 10kΩ resistor were connected in a series voltage divider circuit.The midpoint (output) of this divider was wired to the base of the S8050 NPN transistor, with the transistor's emitter connected to ground and the collector connected to the anode of the LED.

- The RGB LED was connected to ESP32 GPIO pins using 220Ω resistors for each of the Red, Green, and Blue channels to limit current and prevent damage. Specifically:

  - Red LED connected to pin 26,

  - Green LED to pin 25,

  - Blue LED to pin 33.

- The ESP32 microcontroller managed all functions, including Bluetooth communication, RGB LED control, and lux measurement calculations.

- The I2C LCD module (address: 0x27) was connected to the ESP32's SDA and SCL pins for displaying real-time lux values. This module was positioned at the front of the setup for easy visibility of the lux readings.

- Wiring was organised to reduce clutter, and connections were tested for continuity to avoid any loose or cold solder joints.

2. POWERING THE CIRCUIT:

- The ESP32 was powered via a USB-C power supply (around 6V), the other components of the circuits were powered by the Vin(5V) pin of the ESP32.

- The LDR and RGB LED circuits were also powered from this 5V supply, ensuring consistent performance without fluctuations.

- After confirming all connections, the project was enclosed in a simple casing to protect components from dust and incidental contact while still allowing access to the ESP32's micro-USB port for programming and power.

3. TESTING PROCEDURE:

A. Initial Testing of Ambient Light Sensor:

- The LDR circuit was tested in varying lighting conditions to ensure the correct operation of the lux meter.

- With the room at different brightness levels, the ESP32 analog input was monitored for the voltage changes at the base of the transistor.

- By measuring these voltage outputs in known lighting conditions (e.g., dark room vs. brightly lit room), we calibrated the lux calculation to confirm that values mapped correctly from 0 lux in total darkness to around 4,000 lux in full brightness.

- The logarithmic relationship implemented in the code was fine-tuned to ensure accuracy across the measured range.

B. I2C LCD Module Verification:

- The I2C LCD was tested to ensure proper communication with the ESP32, displaying clear text without flicker or lag.
- The lux values calculated from the LDR circuit were displayed on the LCD, and their accuracy was verified by comparing the values with standard lux meters under identical lighting conditions.
- Calibration adjustments were made in the code to improve precision, ensuring that the displayed lux values accurately represented the ambient lighting.

C. Bluetooth Communication Testing:

- Using the **Serial Bluetooth Terminal app** on a smartphone, the Bluetooth functionality of the ESP32 was tested.
- RGB colour values were sent to the ESP32 in the format `HHH,HHH,HHH` (representing red, green, and blue intensities, respectively).
- The ESP32 processed these values and adjusted the RGB LED's colour intensity accordingly, allowing precise colour control through Bluetooth commands.
- The RGB LED responded in real-time to commands, enabling smooth colour transitions and the creation of various colour patterns.

D. RGB LED Testing:

- After verifying the Bluetooth control, the RGB LED was tested in standalone mode to confirm each colour channel's function and brightness.
- Different combinations of RGB values were sent through the Bluetooth app to test the LED's response.
- By testing a series of common colour combinations, such as pure red, green, and blue (255,0,0 / 0,255,0 / 0,0,255) and secondary colours like cyan, magenta, and yellow (0,255,255 / 255,0,255 / 255,255,0), we confirmed that the LED accurately displayed the desired colour.

- A series of colour mixes were saved as presets in the Bluetooth app for quick access, providing a user-friendly way to change LED colours without needing to enter values manually each time.

E. Integration Testing:

- With both the lux meter and RGB LED functioning independently, the full system was tested for proper integration.
- The lux display on the LCD was observed under changing light conditions to confirm stable, accurate readings.
- Simultaneously, Bluetooth commands were sent to control the RGB LED, ensuring there was no interference or delay in response between the lux meter and the RGB LED control.
- The system was run continuously over several hours to check for any overheating, connectivity drops, or display issues.

F. Final Calibration and Validation:

- After the initial testing, calibration adjustments were made to the lux equation to further refine accuracy, particularly in low-light scenarios where small voltage changes can lead to significant lux fluctuations.
- The system was validated by comparing the lux output with known light sources of calibrated intensity, confirming the accuracy of the logarithmic mapping.
- The RGB LED was observed for colour accuracy across various commands to ensure that the full 0-255 range was properly mapped for each channel.

RESULTS AND CONCLUSION

The final assembly and testing confirmed the project's successful operation:

- **Lux Meter:** Accurate lux values were displayed on the I2C LCD with reliable response across a wide range of ambient lighting.
- **Bluetooth-Controlled RGB LED:** The RGB LED displayed the desired colour upon receiving Bluetooth commands, with quick response times and consistent colour mixing.
- **System Stability:** The system operated continuously without overheating or connection issues, providing stable performance in both lux monitoring and RGB control.

This smart LED control system illustrates the integration of environmental sensing and Bluetooth control in a practical application. The system adjusts an LED's brightness based on ambient light, while RGB LED colour customisation can be controlled through Bluetooth commands. With its educational and practical implications, this project showcases how ESP32 microcontrollers can be used to create innovative, responsive lighting solutions for various environments.

This thorough testing ensured the system's reliability, usability, and accuracy, making it suitable for deployment in a range of ambient lighting and decorative lighting applications.

FUTURE PROSPECTS:

1. Motion Detection: Integrate motion sensors to enable lighting adjustments based on room occupancy.

2. Smart Home Integration: Connect with smart home ecosystems for control via voice assistants like Alexa or Google Assistant.

3. Enhanced Energy Efficiency: Implement advanced algorithms for more precise brightness control, optimising energy savings.

4. Remote Access and Monitoring: Enable remote control and monitoring through mobile apps or cloud connectivity.

5. Customisable User Profiles: Allow users to create and save lighting presets for different moods or times of day.

6. Environmental Sensing: Expand functionality by adding temperature, humidity, or noise sensors for a more holistic ambient environment controller.

UPGRADES:

This project can benefit from using a commercial-grade LDR for more precise ambient light sensing and a high-quality RGB LED for finer colour mixing, creating a broader range of distinguishable colours. Also enhancing the housing would provide a cleaner, more professional look, while adding a dedicated webpage could allow remote Bluetooth control and lux level monitoring alongside the LCD display, offering a user-friendly interface and greater accessibility.